Cambridge Assessment International Education

Cambridge International AS & A Level

CANDIDATE NAME

CENTRE NUMBER

CANDIDATE NUMBER

5271556310

PHYSICS **9702/42**

Paper 4 A Level Structured Questions **October/November 2022**

2 hours

You must answer on the question paper.

No additional materials are needed.

INSTRUCTIONS

- Answer **all** questions.
- Use a black or dark blue pen. You may use an HB pencil for any diagrams or graphs.
- Write your name, centre number and candidate number in the boxes at the top of the page.
- Write your answer to each question in the space provided.
- Do **not** use an erasable pen or correction fluid.
- Do **not** write on any bar codes.
- You may use a calculator.
- You should show all your working and use appropriate units.

INFORMATION

- The total mark for this paper is 100.
- The number of marks for each question or part question is shown in brackets [ ].

This document has **24** pages. Any blank pages are indicated.

© UCLES 2022

Data

acceleration of free fall	$g = 9.81\ \text{m s}^{-2}$
speed of light in free space	$c = 3.00 \times 10^{8}\ \text{m s}^{-1}$
elementary charge	$e = 1.60 \times 10^{-19}\ \text{C}$
unified atomic mass unit	$1\ \text{u} = 1.66 \times 10^{-27}\ \text{kg}$
rest mass of proton	$m_\text{p} = 1.67 \times 10^{-27}\ \text{kg}$
rest mass of electron	$m_\text{e} = 9.11 \times 10^{-31}\ \text{kg}$
Avogadro constant	$N_\text{A} = 6.02 \times 10^{23}\ \text{mol}^{-1}$
molar gas constant	$R = 8.31\ \text{J K}^{-1}\ \text{mol}^{-1}$
Boltzmann constant	$k = 1.38 \times 10^{-23}\ \text{J K}^{-1}$
gravitational constant	$G = 6.67 \times 10^{-11}\ \text{N m}^2\ \text{kg}^{-2}$
permittivity of free space	$\varepsilon_0 = 8.85 \times 10^{-12}\ \text{F m}^{-1}$ $\left(\frac{1}{4\pi\varepsilon_0} = 8.99 \times 10^{9}\ \text{m F}^{-1}\right)$
Planck constant	$h = 6.63 \times 10^{-34}\ \text{J s}$
Stefan–Boltzmann constant	$\sigma = 5.67 \times 10^{-8}\ \text{W m}^{-2}\ \text{K}^{-4}$

Formulae

uniformly accelerated motion	$s = ut + \frac{1}{2}at^2$ $v^2 = u^2 + 2as$
hydrostatic pressure	$\Delta p = \rho g \Delta h$
upthrust	$F = \rho g V$
Doppler effect for sound waves	$f_\text{o} = \frac{f_\text{s} v}{v \pm v_\text{s}}$
electric current	$I = Anvq$
resistors in series	$R = R_1 + R_2 + \ldots$
resistors in parallel	$\frac{1}{R} = \frac{1}{R_1} + \frac{1}{R_2} + \ldots$

© UCLES 2022

gravitational potential	$\phi = -\frac{GM}{r}$
gravitational potential energy	$E_P = -\frac{GMm}{r}$
pressure of an ideal gas	$p = \frac{1}{3}\frac{Nm}{V}\langle c^2 \rangle$
simple harmonic motion	$a = -\omega^2 x$
velocity of particle in s.h.m.	$v = v_0 \cos \omega t$ $v = \pm \omega \sqrt{(x_0^2 - x^2)}$
electric potential	$V = \frac{Q}{4\pi\varepsilon_0 r}$
electrical potential energy	$E_P = \frac{Qq}{4\pi\varepsilon_0 r}$
capacitors in series	$\frac{1}{C} = \frac{1}{C_1} + \frac{1}{C_2} + ...$
capacitors in parallel	$C = C_1 + C_2 + ...$
discharge of a capacitor	$x = x_0 e^{-\frac{t}{RC}}$
Hall voltage	$V_H = \frac{BI}{ntq}$
alternating current/voltage	$x = x_0 \sin \omega t$
radioactive decay	$x = x_0 e^{-\lambda t}$
decay constant	$\lambda = \frac{0.693}{t_{\frac{1}{2}}}$
intensity reflection coefficient	$\frac{I_R}{I_0} = \frac{(Z_1 - Z_2)^2}{(Z_1 + Z_2)^2}$
Stefan–Boltzmann law	$L = 4\pi\sigma r^2 T^4$
Doppler redshift	$\frac{\Delta\lambda}{\lambda} \approx \frac{\Delta f}{f} \approx \frac{v}{c}$

© UCLES 2022

[Turn over

1 **(a)** Define gravitational field.

.....

..... [1]

(b) A spherical planet can be considered as a point mass at its centre.

(i) On Fig. 1.1, draw gravitational field lines outside the planet to represent the gravitational field due to the planet.

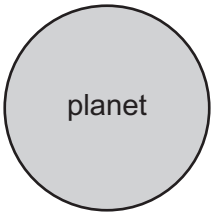

Fig. 1.1

[2]

(ii) A satellite is in a circular orbit around the planet.

Explain, with reference to your answer in **(b)(i)**, why the path of the satellite is circular.

.....

.....

..... [2]

© UCLES 2022

(c) An object rests on the surface of the Earth at the Equator.
The radius of the Earth is 6.4×10^6 m.

(i) Determine the centripetal acceleration of the object.

centripetal acceleration = ... $m\,s^{-2}$ [3]

(ii) Describe how the two forces acting on the object give rise to this centripetal acceleration.
You may draw a diagram if you wish.

.....

.....

..... [2]

[Total: 10]

BLANK PAGE

2 **(a)** Define specific heat capacity.

.....

.....

..... [2]

(b) A fixed mass of water in a beaker is at atmospheric pressure.

(i) The initial temperature of the water is 0 °C.

The water is supplied with thermal energy E, so that its temperature increases to 8 °C. There is no net change in the volume of the water.

Use the first law of thermodynamics to complete Table 2.1 for this process.

Table 2.1

work done on water	thermal energy supplied to water	increase in internal energy of water
	$+E$	

[2]

(ii) The water is now heated so that its temperature increases by a further 8 °C to a final temperature of 16 °C. This process causes the volume of the water to increase so that work W is done.
Assume that the change in internal energy is the same as in **(b)(i)**.

Use the first law of thermodynamics to complete Table 2.2 for this process.

Table 2.2

work done on water	thermal energy supplied to water	increase in internal energy of water

[2]

(c) Use the information in **(b)** to suggest, with a reason, how the average specific heat capacity of water between 8 °C and 16 °C compares with its average value between 0 °C and 8 °C.

.....

..... [1]

[Total: 7]

© UCLES 2022

3 **(a)** The equation of state for an ideal gas can be written as

$$pV = NkT.$$

State the meaning of each of the symbols in this equation.

p: .....

V: .....

N: .....

k: .....

T: .....

[3]

(b) Use the equation in **(a)** to show that the average translational kinetic energy E_K of a molecule of an ideal gas is given by

$$E_K = \frac{3}{2}kT.$$

[2]

(c) The mass of an oxygen molecule is 5.31×10^{-26} kg. Assume that oxygen behaves as an ideal gas.

(i) Use the equation in **(b)** to determine the root-mean-square (r.m.s.) speed *u* of an oxygen molecule at 23 °C.

u = ... $m\,s^{-1}$ [3]

© UCLES 2022

(ii) A fixed mass of oxygen gas at initial pressure *P* is sealed in a cylindrical container by a movable piston at one end, as shown in Fig. 3.1.

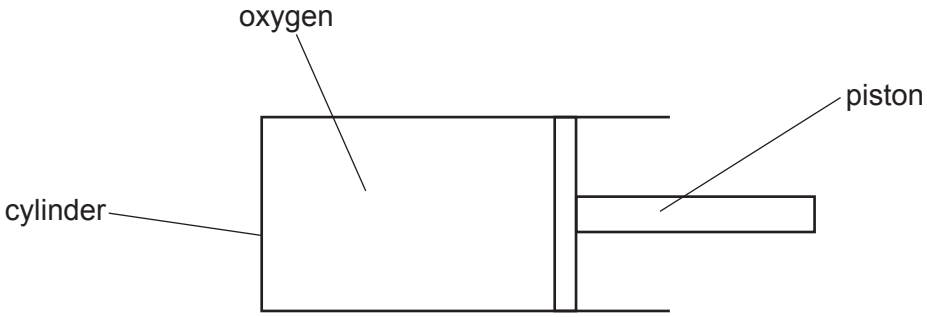

Fig. 3.1

The temperature of the gas is 23 °C.

The piston is slowly moved into the cylinder so that the oxygen gas is compressed. At all times, the gas and the container remain in thermal equilibrium with the surroundings.

On Fig. 3.2, sketch the variation with pressure of the r.m.s. speed of the oxygen molecules as the pressure increases.



Fig. 3.2

[2]

[Total: 10]

4 Fig. 4.1 shows the variation with time t of the height h above the ground of an object of mass 36 kg that is undergoing vertical simple harmonic motion.

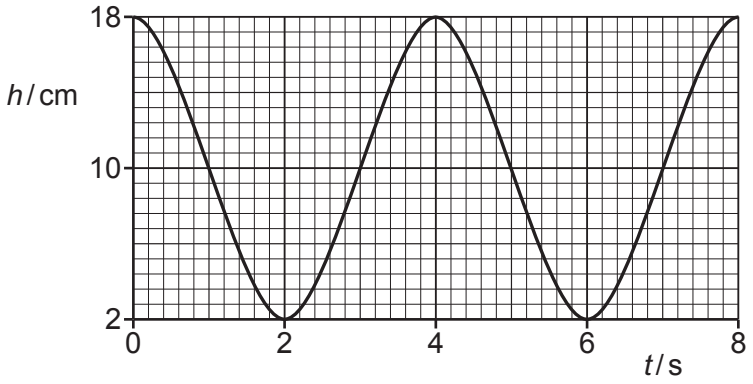

Fig. 4.1

(a) For the oscillations of the object:

(i) determine the amplitude x_0, in cm

x_0 = ... cm [1]

(ii) show that the angular frequency ω is 1.6 rad s^{-1}

[2]

(iii) determine the total energy E.

E = ... J [3]

(b) On Fig. 4.2, sketch the variation with h of the kinetic energy E_K of the object.

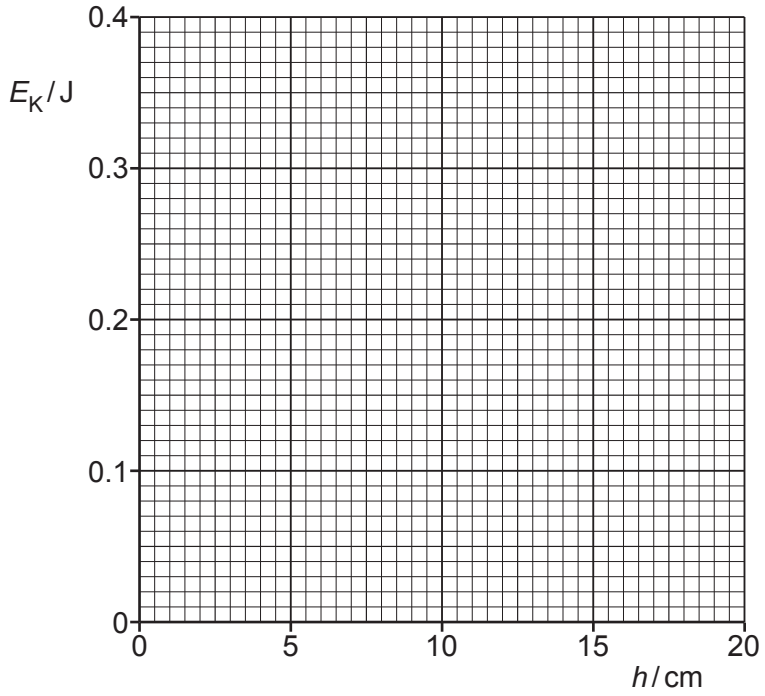

Fig. 4.2

[4]

[Total: 10]

5 **(a)** Define electric potential at a point.

.....

.....

..... [2]

(b) An isolated conducting sphere is charged. Fig. 5.1 shows the variation of the potential V due to the sphere with displacement x from its centre.

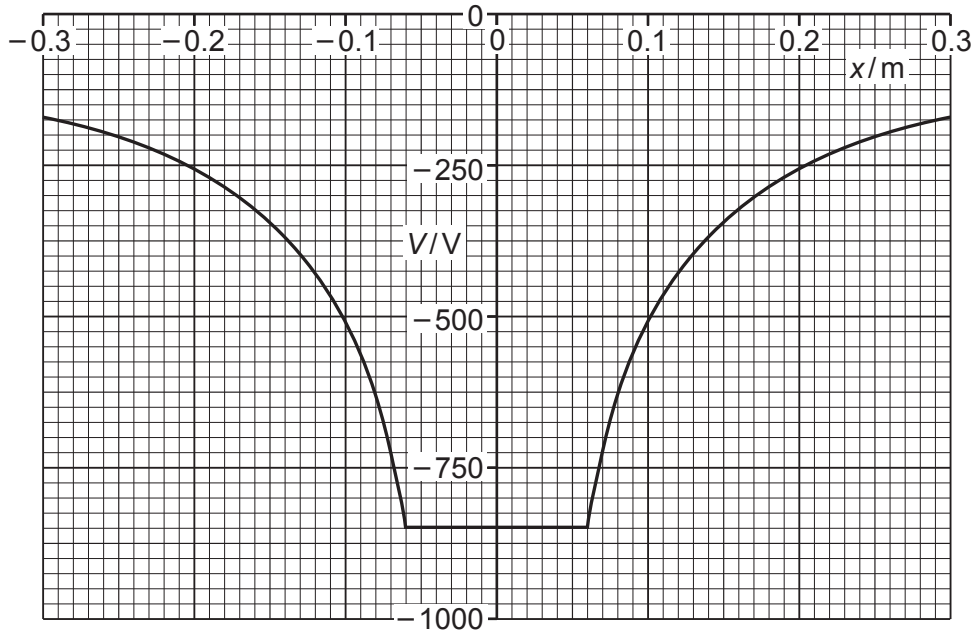

Fig. 5.1

Use Fig. 5.1 to determine:

(i) the radius of the sphere

radius = ... m [1]

(ii) the charge on the sphere.

charge = ... C [2]

(c) Two spheres are identical to the sphere in **(b)**. Each sphere has the same charge as the sphere in **(b)**.

The spheres are held in a vacuum so that their centres are separated by a distance of 0.46 m. Assume that the charge on each sphere is a point charge at the centre of the sphere.

(i) Calculate the electric potential energy E_P of the two spheres.

E_P = ... J [2]

(ii) The two spheres are now released simultaneously so that they are free to move.

Describe and explain the subsequent motion of the spheres.

.....

.....

.....

..... [3]

[Total: 10]

6 A capacitor of capacitance C and a resistor of resistance R are connected as shown in Fig. 6.1.

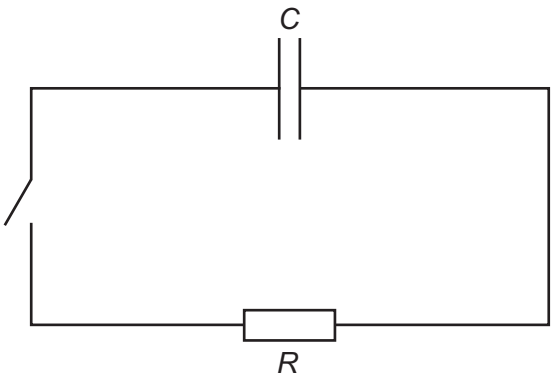

Fig. 6.1

Initially, the capacitor is charged and the switch is open.

The switch is closed at time $t = 0$.

Fig. 6.2 and Fig. 6.3 show, respectively, the variations with t of the charge Q on the capacitor and the potential difference (p.d.) V across the resistor.

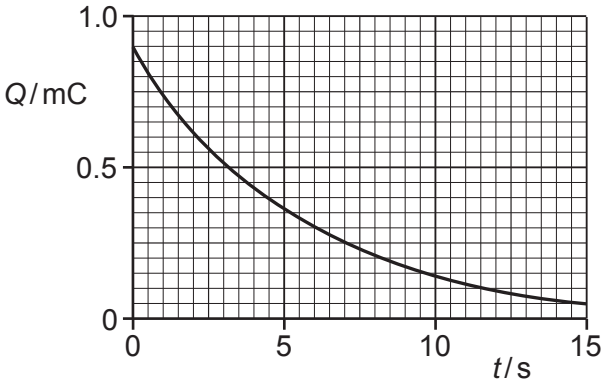

Fig. 6.2

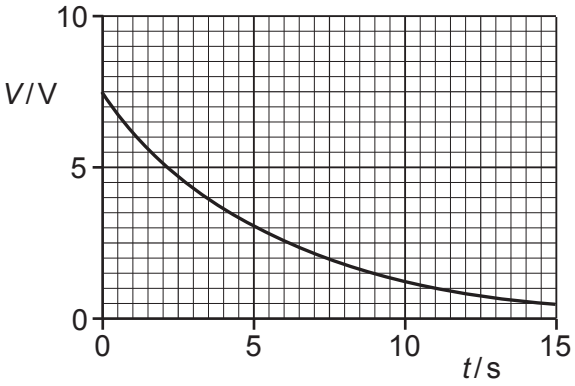

Fig. 6.3

(a) Explain the shape of the line in Fig. 6.3 representing the variation of V with t.

.....

.....

.....

.....

..... [3]

(b) Use Fig. 6.2 to show that the time constant of the circuit in Fig. 6.1 is 5.5 s.

[3]

(c) Use Fig. 6.2, Fig. 6.3 and the information in **(b)** to determine:

(i) capacitance C, in μF

C = ... μF [2]

(ii) resistance R, in kΩ.

R = ... kΩ [2]

[Total: 10]

7 **(a)** Define magnetic flux density.

.....

.....

.....

..... [3]

(b) An insulated rectangular coil of wire, consisting of 40 turns, is suspended in a cradle from a newton meter, as shown in Fig. 7.1.

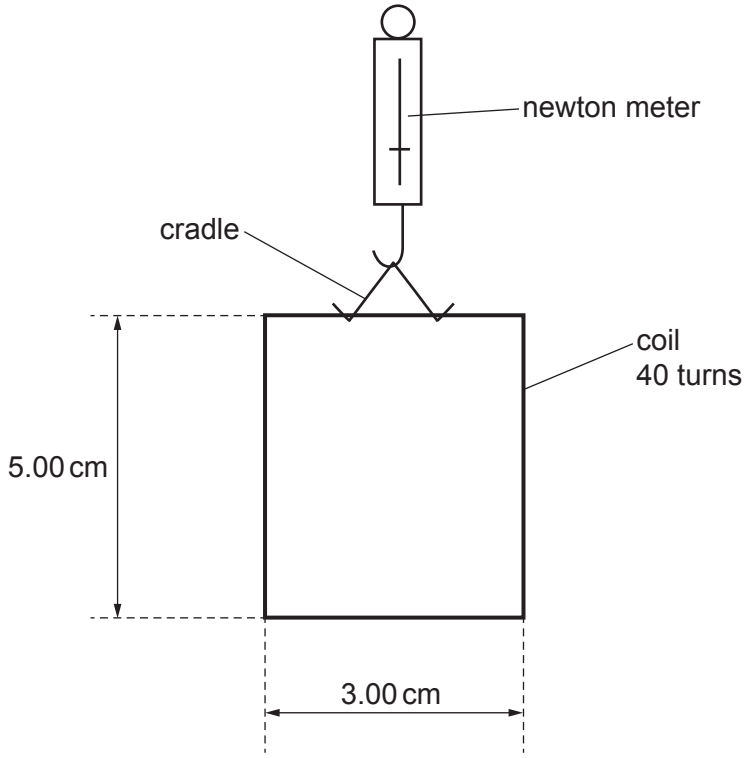

Fig. 7.1

The vertical sides of the coil have a length of 5.00 cm and the horizontal sides have a length of 3.00 cm. The initial reading on the newton meter is 0.563 N.

A U-shaped magnet rests on a top-pan balance that is set to a reading of 0.00 g.
The lower edge of the coil is lowered into the region between the poles of the U-shaped magnet, as shown in the side view in Fig. 7.2.

© UCLES 2022

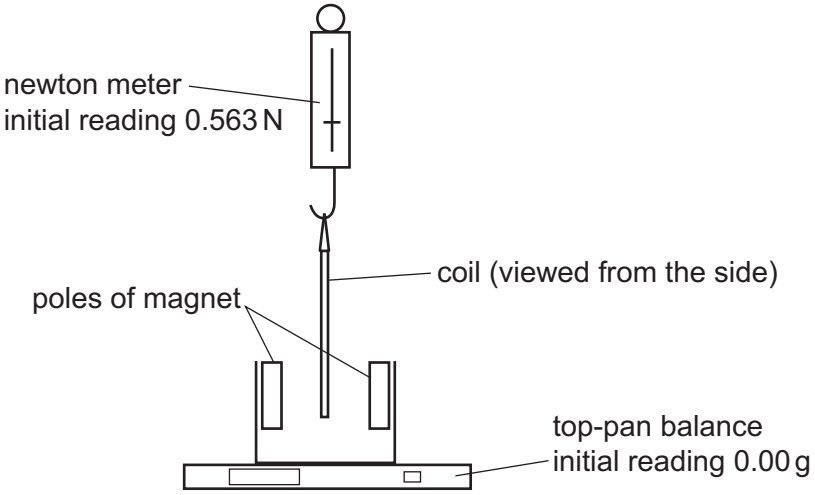

Fig. 7.2

The magnetic field in the region between the poles is uniform.
The lower edge of the coil is entirely within the uniform magnetic field.

A current of 3.94 A is now passed through the coil. This causes the reading on the top-pan balance to change to 2.16 g.

(i) Explain why the current causes a vertical force to act on the coil.

.....

.....

..... [2]

(ii) Determine, to three significant figures, the flux density *B* of the uniform magnetic field.

B = ... T [3]

(iii) Determine what is now the reading on the newton meter. Explain your reasoning.

reading = ... N [2]

[Total: 10]

8 **(a)** State Lenz's law of electromagnetic induction.

.....

.....

..... [2]

(b) Two coils of insulated wire are wound on an iron bar, as shown in Fig. 8.1.

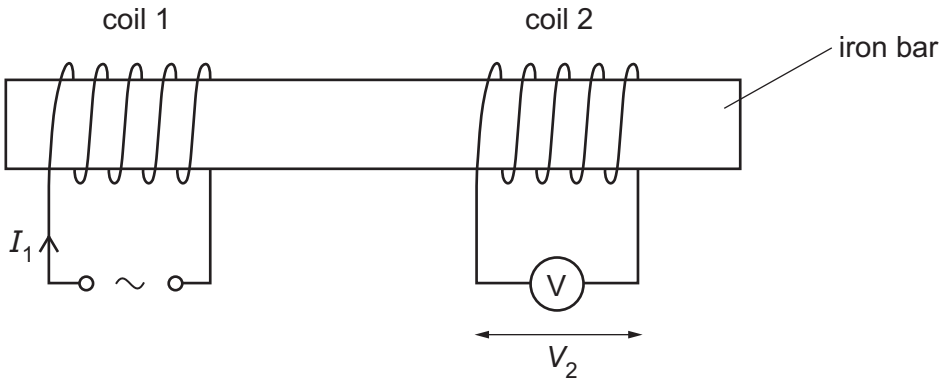

Fig. 8.1

There is a current I_1 in coil 1 that varies with time *t* as shown in Fig. 8.2.

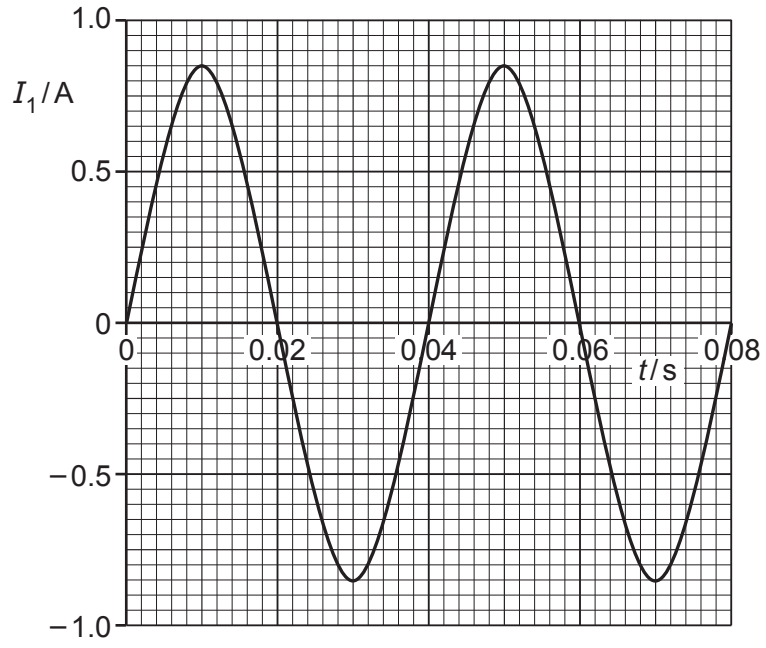

Fig. 8.2

(i) The variation with t of I_1 can be represented by the equation

$$I_1 = X \sin Yt$$

where X and Y are constants.

Use Fig. 8.2 to determine the values of X and Y. Give units with your answers.

X = ... unit .....

Y = ... unit .....

[3]

(ii) The current in coil 1 gives rise to a magnetic field in the iron bar.
Assume that the flux density of this magnetic field is proportional to I_1.

An alternating electromotive force (e.m.f.) is induced across coil 2. The p.d. across coil 2 is measured using the voltmeter and has a root-mean-square (r.m.s.) value of 4.6 V.

On Fig. 8.3, sketch a line to show the variation with t of V_2 between $t = 0$ and $t = 0.08$ s.

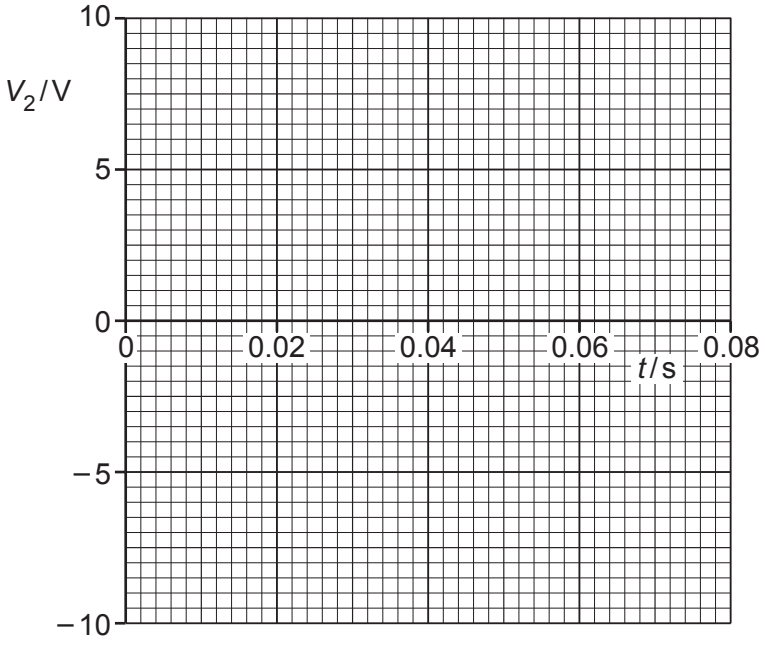

Fig. 8.3

[3]

(iii) Use the laws of electromagnetic induction to explain the shape of your line in **(b)(ii)**.

.....

.....

.....

..... [3]

[Total: 11]

9 **(a)** Fig. 9.1 shows the visible part of the emission spectrum from hydrogen gas in a laboratory on the Earth. The numbers indicate the wavelength, in nm, represented by each line.

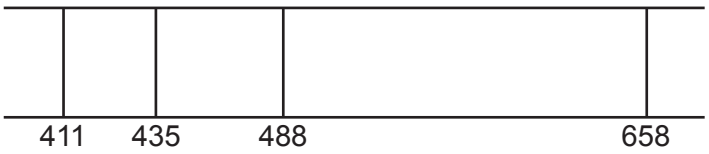

Fig. 9.1

(i) Explain how the emission spectrum provides evidence for the existence of discrete energy levels for the electron in a hydrogen atom.

.....

.....

.....

..... [3]

(ii) Fig. 9.2 shows five of the energy levels in the hydrogen atom. The wavelengths of radiation shown in Fig. 9.1 relate to transitions to the –3.400 eV level in Fig. 9.2.

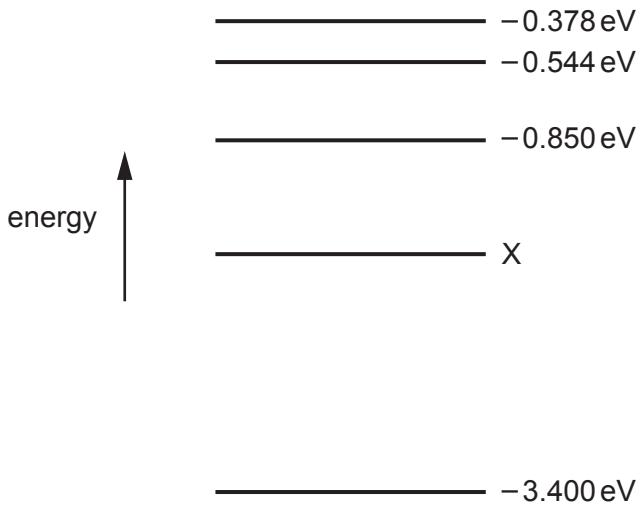

Fig. 9.2 (not to scale)

Show that the energy level X is –1.51 eV.

[3]

(b) The same part of the emission spectrum from hydrogen as in **(a)**, observed in light from stars in a distant galaxy, is shown in Fig. 9.3. The numbers indicate the wavelengths in nm.

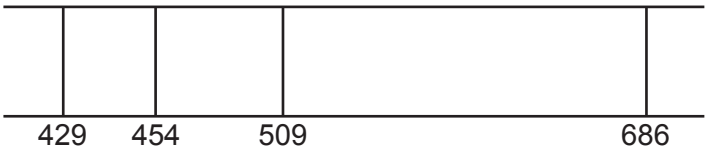

Fig. 9.3

The spectrum shows the same pattern as Fig. 9.1 but with different wavelengths.

(i) State the name of the phenomenon that gives rise to the change in the wavelengths.

..... [1]

(ii) State what this phenomenon shows about the motion of the galaxy.

..... [1]

(iii) Use one of the lines in Fig. 9.1, and the corresponding line in Fig. 9.3, to determine the speed of the distant galaxy relative to the observer.

speed = ... $m\,s^{-1}$ [3]

(c) The galaxy in **(b)** is known to be a distance of 5.7×10^{24} m from the Earth.

Use your answer in **(b)(iii)** to determine a value for the Hubble constant H_0.

H_0 = ... s^{-1} [2]

[Total: 13]

BLANK PAGE

© UCLES 2022

10 Positron emission tomography (PET scanning) involves the detection of gamma-radiation in order to identify the position of origin of positrons in the body.

(a) (i) Positrons are not naturally present in the body.

Explain how positrons come to be present in the body during PET scanning.

.....

.....

..... [2]

(ii) Explain how positrons cause the emission of gamma-radiation from the body during PET scanning.

.....

.....

.....

..... [3]

(b) Show that the wavelength of the gamma-radiation that is detected during PET scanning is approximately 2.4 pm. Explain your reasoning.

[4]

[Total: 9]

BLANK PAGE

Permission to reproduce items where third-party owned material protected by copyright is included has been sought and cleared where possible. Every reasonable effort has been made by the publisher (UCLES) to trace copyright holders, but if any items requiring clearance have unwittingly been included, the publisher will be pleased to make amends at the earliest possible opportunity.

To avoid the issue of disclosure of answer-related information to candidates, all copyright acknowledgements are reproduced online in the Cambridge Assessment International Education Copyright Acknowledgements Booklet. This is produced for each series of examinations and is freely available to download at www.cambridgeinternational.org after the live examination series.

Cambridge Assessment International Education is part of Cambridge Assessment. Cambridge Assessment is the brand name of the University of Cambridge Local Examinations Syndicate (UCLES), which is a department of the University of Cambridge.

© UCLES 2022